# DC/DC Converters

## TEQ 160WIR Series, 160 Watt

### Features

- High power block with excellent thermal convection
- Operating temperature -40°C to +75° without derating
- Increased shock & vibration resistance
- Ultra wide 4:1 input voltage range
- EN 50155 approval for railway applications
- Excellent efficiency up to 90%
- Input filter meet EN 55022, class A
- I/O insulation 2250 VDC
- Under voltage lock-out circuit
- Soft start
- Input protection filter

CB Scheme

UL 508

UL 60950-1

The TEQ-160WIR Series is a family of isolated high performance dc-dc converter modules with ultra-wide 4:1 input voltage ranges which come in a rugged, sealed metal case.
These converters are suitable for a wide range of applications, but the product is designed particularly also for industrial applications where often no PCB mounting is possible but the module has to be mounted on a chassis. A very high efficiency and the overall heatsink construction allows an operating temperature up to +75°C with natural convection cooling without power derating and up to +90°C with power derating. Further features include output voltage trimming, Remote On/Off and under voltage lockout. The very wide input voltage range and reverse input voltage protection make these converters also an interesting solution for battery operated systems.

## Models

| Order code | Input voltage | Output voltage | Output current max. | Efficiency typ. |
|---|---|---|---|---|
| TEQ 160-4812WIR | 19 – 75 VDC (48 VDC nominal) | 12 VDC (9.6 – 13.2) | 13 A | 90 % |
| TEQ 160-4815WIR | | 24 VDC (19.2 – 26.4) | 6.5 A | 90 % |
| TEQ 160-4816WIR | | 28 VDC (22.4 – 30.8) | 5.5 A | 90 % |
| TEQ 160-4818WIR | | 48 VDC (38.4 – 52.8) | 3.2 A | 90 % |
| TEQ 160-7212WIR | 43 – 160 VDC (110 VDC nominal) | 12 VDC (9.6 – 13.2) | 15 A | 89 % |
| TEQ 160-7215WIR | | 24 VDC (19.2 – 26.4) | 7.5 A | 89 % |
| TEQ 160-7216WIR | | 28 VDC (22.4 – 30.8) | 6.5 A | 89 % |
| TEQ 160-7218WIR | | 48 VDC (38.4 – 52.8) | 3.8 A | 89 % |



Distributed by:
**Power Sources Unlimited, Inc.** Wrentham, MA • Tel: 508-384-1419 • sales@psui.com • www.psui.com

## Input Specifications

| | | |
|---|---|---|
| Input current at no load | 48 Vin models:<br>110 Vin models: | 20 mA typ.<br>10 mA typ. |
| Start-up voltage | 48 Vin models:<br>110 Vin models: | 18.0 VDC (or lower)<br>43.0 VDC (or lower) |
| Under voltage shut down (lock-out circuit) | 48 Vin models:<br>110 Vin models: | 15.8 VDC min.<br>34.5 VDC min |
| Surge voltage (1 sec. max.) | 48 Vin models:<br>110 Vin models: | 100 V max.<br>185 V max. |
| Conducted noise | | EN 55022 class A |
| EMC immunity | | EN 50121-3-2 |
| | – ESD (electrostatic discharge) | EN 61000-4-2, air ±8 kV, contact ±6 kV, perf. criteria A |
| | – Radiated immunity | EN 61000-4-3, 20 V/m, perf. criteria A |
| | – Fast transient / surge | EN 61000-4-4, ±2 kV, perf. criteria A<br>EN 61000-4-5, ±1 kV, perf. criteria A<br>EN 61000-4-5, ±2 kV, perf. criteria A |
| | – Conducted immunity | EN 61000-4-6, 10 Vrms, perf. criteria A |
| | – Railway immunity | EN 50155 |
| Reverse voltage protection | | parallel diode |

## Output Specifications

| | | |
|---|---|---|
| Voltage set accuracy | | ±1 % |
| Output voltage adjustment | | +10 % / –20 % |
| Regulation | – Input variation Vin min. to Vin max.<br>– Load variation (0 – 100 %) | 0.1 % max.<br>0.1 % max. |
| Temperature coefficient | | ±0.02 %/K |
| Minimum load | | not required |
| Remote sense | | up to Vout nom. +10% |
| Ripple and noise (20 MHz Bandwidth) | 12 VDC models:<br>24 & 28 VDC models:<br>48 VDC models: | 125 mVpk-pk max.<br>250 mVpk-pk max.<br>350 mVpk-pk max. |

## Output Specifications

| | | |
|---|---|---|
| Start up time (nominal Vin and constant resistive load) | | 75 ms typ. (at power On or remote On) |
| Transient response (25% load step change) | | 250 µs max. |
| Output current limitation | | at 120 -150 % of Iout max. |
| Over voltage protection | | at 115 -130 % of Vout nom. |
| Short circuit protection | | hiccup, automatic recovery |
| Capacitive load (48Vin / 110Vin) | 12 VDC models:<br>24 VDC models:<br>28 VDC models:<br>48 VDC models: | 10'800 / 12'500 µF max.<br>2'700 / 3'100 µF max.<br>1'900 / 2'300 µF max.<br>660 / 790 µF max. |

## General Specifications

| | | |
|---|---|---|
| Temperature ranges | – Operating<br>– Storage | –40°C to +105°C (up to +75°C w/o derating)<br>–40°C to +105°C |
| Thermal impedance | | 1.45°C/W |
| Derating | | See derating graph below |
| Over temperature protection | | at 120°C |
| Thermal shock | | acc. MIL-STD-810F |
| Shock & Vibration | | acc. EN61373, MIL-STD-810F |
| Humidity (non condensing) | | 95 % rel H max. |
| Reliability, calculated MTBF (MIL-HDBK-217F, at +25°C, ground benign) | | TBD |
| Isolation voltage (60 sec.) | – Input/Output<br>– Input/Case | 2'250 VDC (basic insulation)<br>1'600 VDC |
| Isolation resistance | – Input/Output (500 VDC) | >1 GOhm min. |
| Switching frequency | | 250 kHz typ. (puls width modulation) |
| Safety standards | – CB test certificate<br>– CSA certificate of compliance<br>– UL online certification E188913, QQGQ2<br>– Railway immunity<br>– Flamability identified acc.<br>– Certification documents | IEC/EN 60950-1 (ed. 2), EN 60950-1:2006/A11:2009/A1:2010/A12:2011/A2:2013<br>UL 508, CSA C22.2 No. 107.1-01<br>UL 60950-1 2nd ed. +Am1<br>EN50155<br>EN45545-2<br>www.tracopower.com/overview/teq160wir |
| Remote On/Off | – positive logic (standard)<br>– Off idle current: | – On: 3 to 12 VDC or open circuit<br>– Off: 0 to 1.2 VDC or short circuit terminal 1 and 4<br>3 mA |
| Environmental compliance | – Reach document<br>– RoHS | www.tracopower.com/overview/teq160wir<br>RoHS directive 2011/65/EU |

Temperature derating

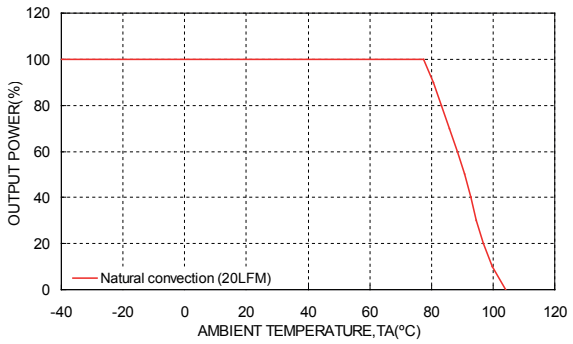


All specifications valid at nominal input voltage, full load and +25°C after warm-up time unless otherwise stated.

## Physical Specifications

| | |
|---|---|
| Casing material | aluminium |
| Potting material | silicone (UL94V-0 rated) |
| Base material | FR4 |
| Weight | 800 g (28.22oz) |

## Dimensions

TEQ 160WIR module:

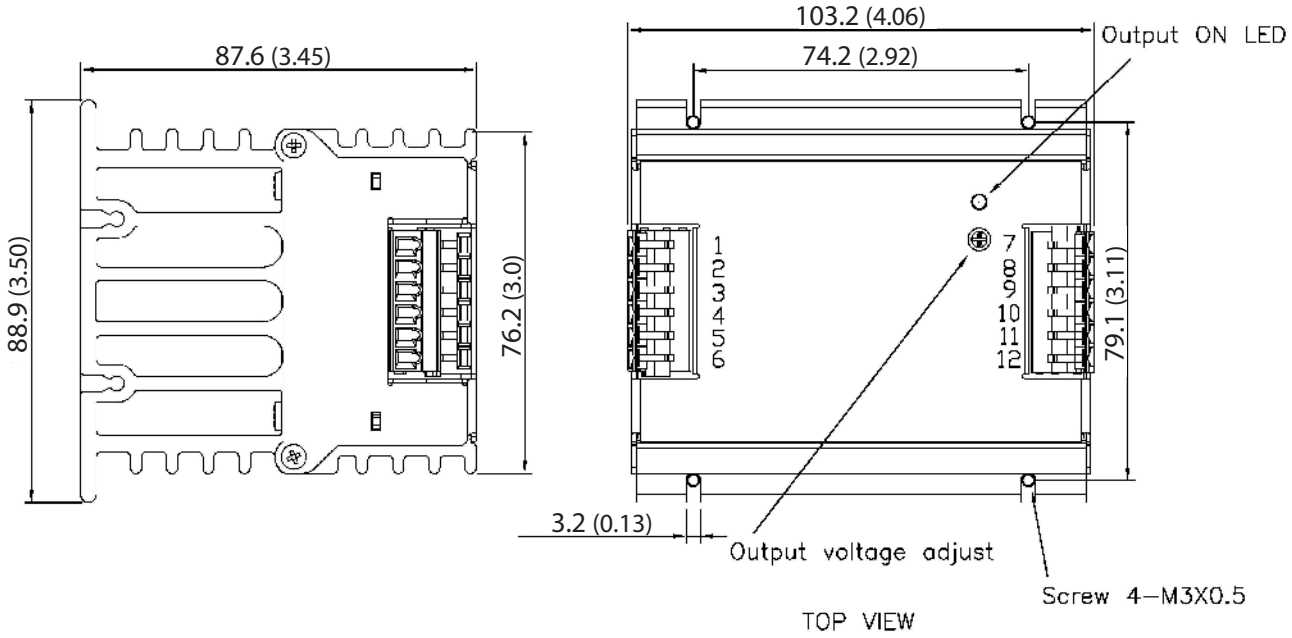


Weight: 800 g (28.22oz)

| Connection | |
|---|---|
| **Terminal** | |
| **1** | – Vin |
| **2** | – Vin |
| **3** | NC |
| **4** | Ctrl (Remote On/Off) |
| **5** | + Vin |
| **6** | + Vin |
| **7** | – Vout |
| **8** | – Vout |
| **9** | – Sense* |
| **10** | + Sense* |
| **11** | + Vout |
| **12** | + Vout |

*Sense line to be connected to the output either at the module or at the load under regard of polarity.

DIN-Rail clip: **Order code: TEP-MK1**

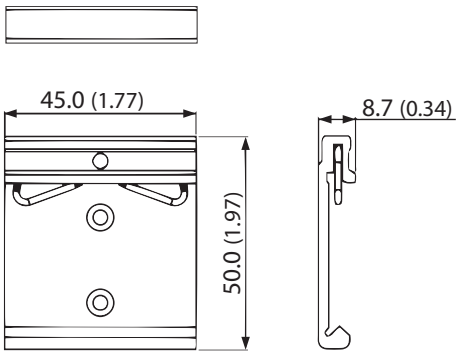




Distributed by:
**Power Sources Unlimited, Inc.** Wrentham, MA • Tel: 508-384-1419 • sales@psui.com • www.psui.com