COTEK 1500W Pure Sine Wave Inverter SP-1500 series

Features:

- Pure sine wave output
- Power ON / OFF remote control (Green Terminal)
- Remote controller CR-8 / CR-16A (optional)
- Input & Output fully isolation
- Temperature & Load controlled cooling fan
- Built in advance microprocessor to provide friendly interface
- Output frequency 50 / 60 Hz selectable by DIP switch
- Output voltage DIP switch selectable
- Adjustable power saving mode by variable resister
- 3-color LED status indicators
- Input protection: Reverse Polarity (Fuse) / Under Voltage / Over Voltage
- Output protection: Short Circuit / Overload / Over Temperature
- E13 / UL / CE / FCC approved

MODEL		SP-1500-112	SP-1500-124	SP-1500-148	SP-1500-212	SP-1500-224	SP-1500-248
Output	AC Voltage	100 / 110 / 115 / 120VAC			200 / 220 / 230 / 240VAC		
	AC Regulation	±5%			±3%		
	Rated Power	1500VA					
	Surge Power (1 Sec)	<2650VA					
	Maximum Output Power (1 Min)	>1500VA~1730VA (100%~115%)					
	Output Waveform	Pure Sine Wave (THD<5%@Normal Load NOTE1)			Pure Sine Wave (THD<3%@Normal Load NOTE2)		
	Frequency	50 / 60 Hz ±0.5%					
Input	DC Voltage	12VDC	24VDC	48VDC	12VDC	24VDC	48VDC
	Voltage Range	10.5 ~ 16.5VDC	21.0 ~ 33.0VDC	42.0 ~ 66.0VDC	10.5 ~ 16.5VDC	21.0 ~ 33.0VDC	42.0 ~ 66.0VDC
	NO Load Current	≤1.8A@12VDC	≤1.0A@24VDC	≤0.5A@48VDC	≤1.8A@12VDC	≤1.0A@24VDC	≤0.5A@48VDC
	Power Saving Mode	<0.1A@12VDC	<0.05A@24VDC	<0.05A@48VDC	<0.1A@12VDC	<0.05A@24VDC	<0.05A@48VDC
	Efficiency (Max.)	91%	92%	93%	93%	94%	94%
Protection	Input Under - Voltage Protection	10.5 ±0.3VDC	21.0 ±0.5VDC	42.0 ±1.0VDC	10.5 ±0.3VDC	21.0 ±0.5VDC	42.0 ±1.0VDC
	Input Under - Voltage Alarm	11.0 ±0.3VDC	22.0 ±0.5VDC	44.0 ±1.0VDC	11.0 ±0.3VDC	22.0 ±0.5VDC	44.0 ±1.0VDC
	Input Under - Voltage Recovery	12.5 ±0.3VDC	25.0 ±0.5VDC	50.0 ±1.0VDC	12.5 ±0.3VDC	25.0 ±0.5VDC	50.0 ±1.0VDC
	Input Over - Voltage Protection	16.5 ±0.3VDC	33.0 ±0.5VDC	66.0 ±1.0VDC	16.5 ±0.3VDC	33.0 ±0.5VDC	66.0 ±1.0VDC
	Input Over - Voltage Recovery	14.5 ±0.3VDC	29.0 ±0.5VDC	58.0 ±1.0VDC	14.5 ±0.3VDC	29.0 ±0.5VDC	58.0 ±1.0VDC
	Output Overload	Shutdown output voltage, restart to recover					
	Output Short	Shutdown output voltage, restart to recover					
	Over Temperature	Heat sink temperature over 80°C ±5°C, shutdown output voltage, recover automatically after heat sink temperature goes down to 60°C ±5°C					
	DC Input Reverse Polarity	By fuse					
Environment	Operating Temp.	-20°C ~ +40°C					
	Storage Temp.	-30°C ~ +70°C					
	Storage Temp. & Humidity	10 ~ 95% RH					
Safety & EMC	Safety Standards	Certified UL 458 NOTE3		----	Certified EN 60950-1		
	EMC Standards	Certified FCC class B			Certified EN 55022 class B; EN 55024 EN 61000-3-2, -3-3 EN 61000-4-2, 3, 4, 5, 6, 8, 11		
	E-mark	----			Certified CISPR 25 ISO 7637-2		
Control & Signal	Accessory (Optional)	Remote Control: CR-8 / CR-16A; Transfer Switch: TR-40					
	LED Indicator	Input voltage level, output load level and faulty status					
	Dry Contact Terminal	By relay					
	Remote Control Terminal	6-port green terminal					
Others	Dimension (W x H x D)	248x83x421 mm / 9.76x3.27x16.57 inch					
	Packing	4.14kg; 4pcs / 17.56kg / 3.58CUFT					
	Cooling	Temperature & load controlled cooling fan					
	Application	Home and office appliances, portable power equipment, vehicle, yacht and off-grid Solar power systems ...etc.					
	Socket Type	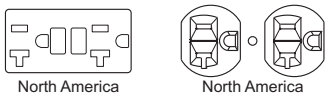 North America (GFCI) North America (NEMA 5-20R)			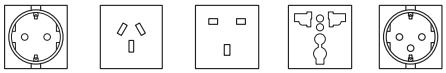 Continental European (SCHUKO) Australia / New Zealand United Kingdom Universal France Connector		

Note1 - Normal Condition: Vin=12.5V / 25V / 50V Vo=100 / 110 / 115 / 120 VAC 80% Full load (PF=1.0)
Note2 - Normal Condition: Vin=12.5V / 25V / 50V Vo=200 / 220 / 230 / 240 VAC 80% Full load (PF=1.0)
Note3 - UL only for GFCI receptacles
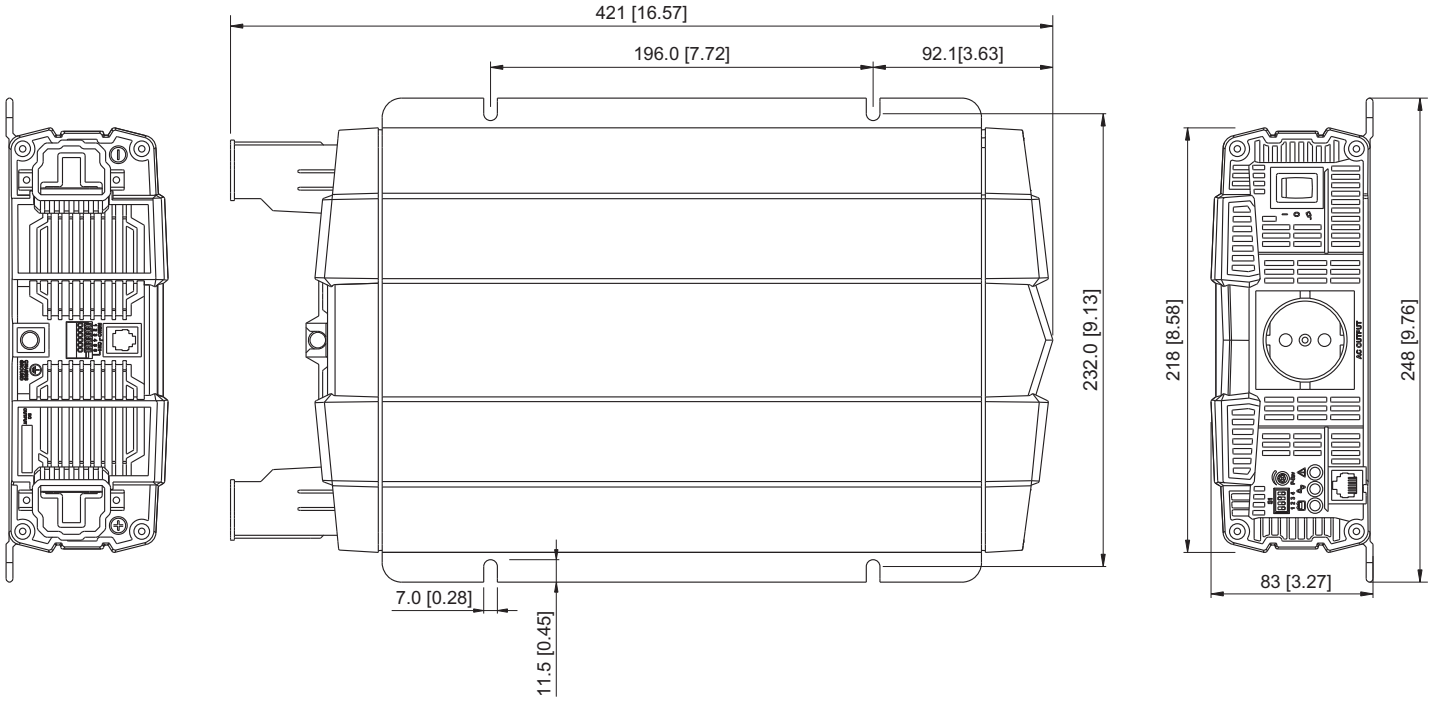
Mechanical Drawings: